SpaJets

Your Single Source Supplier

- Double seal barrels and wide windows for better vacuum
- Check valve option eliminates water flow into air lines
- Strong compensator ring provides a better seal even when facing inconsistent wall thicknesses

made in the usa

BALBOA™ water group

TableOfContents

Spa Jets

Pearl Essence Jets (Stainless Steel and Plastic) 4

Light Up Jets (Stainless Steel and Plastic) 6

Pismo Jets (Stainless Steel Over Plastic)

2″ 8
3″ 10
3.5″ 12
5″ 14
7″ 16

Venice Jets (Plastic Over Stainless Steel)

2″ 18
3″ 20
3.5″ 22
5″ 24
7″ 26

Laguna Jets (Stainless Steel)

2″ 28
3″ 30
3.5″ 32
4″ 34
5″ 36
7″ 38

Lido Jets (Plastic)

2″ 40
3″ 44
3.5″ 48
4″ 52
5″ 54
6.5″ 60

Technical Information

Hole Sizing and Color Codes 64

Your Single Source Solution. p 714.384.0384 | f 714.384.0385

We reserve the right to change technical data without further notice.
No copies authorized. All rights reserved. ©2014 Balboa Water Group

BALBOA water group

PearlEssenceCollection

Stainless Steel and Plastic Jets

2" Clear Jet Body Assembly

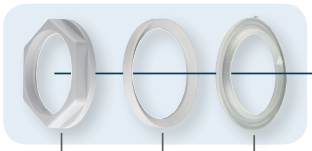

Nut (985734)

Gasket L Design (943506)

Compensator Ring (943509)

Jet Body (947600-CL)
⅜" air barbed x ¾" water barbed

3" Clear Jet Body Assembly

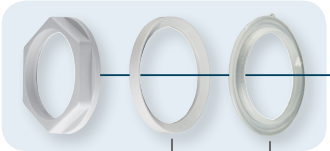

Nut (955900)

Gasket L Design (959000)

Compensator Ring (90095100)

Jet Body (90094800-CL)
⅜" air barbed x ¾" water barbed

3.5" Clear Jet Body Assembly

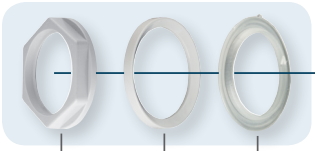

Nut (985600)

Gasket L Design (985700) or Flat Gasket (948601) Both Optional

Compensator Ring (985800)

Jet Body (985900-CL)
⅜" Air Barbed x ¾" Water Socket
With Check Valve (986300)

5" Clear Jet Body Assembly

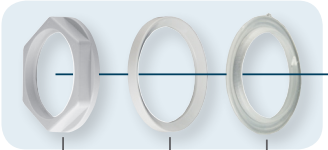

Nut (47940000)

Gasket L Design (946600) or Flat Gasket (47930000) Optional

Compensator Ring (47950000)

Jet Body (47970000-CL)
⅜" Air Barbed x ¾" Water Socket
With Check Valve (958100)

Your Single Source Solution. p 714.384.0384 | f 714.384.0385

We reserve the right to change technical data without further notice.
No copies authorized. All rights reserved. ©2014 Balboa Water Group

Dress up your tub with proven technology and add show room bling to help sell hot tubs. Other components such as filters and water features can be made in clear to blend in with the look.

Pearl Essence Pismo Jets

2″ PISMO ESC PEARL IVORY	943002-XX*
2″ SS PISMO DIRECT FLOW	982300-XX*
2″ SS PISMO DIRECTIONAL	982301-XX*
3″ SS PISMO DIRECTIONAL	983300-XX*
3″ SS PISMO SWIRL METAL	983301-XX*
3" SS PISMO PIN SPIN	983304-XX*
3" SS PISMO NECK JET CLEAR EYEBALL	983305-XX*
3.5″ SS PISMO DIRECTIONAL	983530-XX*
3.5″ SS PISMO SWIRL	983531-XX*
3.5" SS PISMO PIN SPIN	983534-XX*
5″ SS PISMO DIRECTIONAL	985300-XX*
5″ SS PISMO SWIRL	985301-XX*
5″ SS PISMO PIN SPIN	985304-XX*

Pearl Essence Venice Jets

2″ SS VENICE DIRECTIONAL	982501-XX*
3″ SS VENICE DIRECTIONAL	983500-XX*
3″ SS VENICE SWIRL	983501-XX*
3.5″ SS VENICE DIRECTIONAL	9835500-XX*
3.5″ SS VENICE SWIRL	9835501-XX*
5″ SS VENICE DIRECTIONAL	985500-XX*
5″ SS VENICE SWIRL	985501-XX*

* Replace XX with the corresponding jet color before placing your order. Example if you like to order jet 982301-XX. Replace the XX with PIV for Ivory Pearl.

Additional Available Colors

- Ivory Pearl = PIV
- Sky Blue= PSB
- Mahogany = PMY
- Silver Pearl = PSL
- Java Pearl = PJV
- Red Pearl = PRD

For more information about our Pearl Essence jets please call our customer service 714.384.0384.

Your Single Source Solution. p 714.384.0384 | f 714.384.0385

We reserve the right to change technical data without further notice.
No copies authorized. All rights reserved. ©2014 Balboa Water Group

LightUpCollection

Stainless Steel and Plastic Jets

2″ Clear Jet Body Assembly

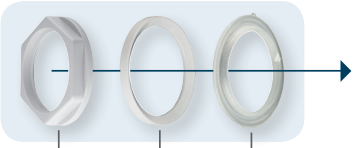

Nut (985734)

Gasket L Design (943506)

Compensator Ring (943509)

Jet Body (947600-CL)
⅜″ air barbed x ¾″ water barbed

3″ Clear Jet Body Assembly

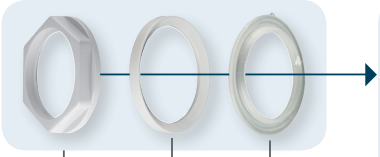

Nut (955900)

Gasket L Design (959000)

Compensator Ring (90095100)

Jet Body (90094800-CL)
⅜″ air barbed x ¾″ water barbed

3.5″ Clear Jet Body Assembly

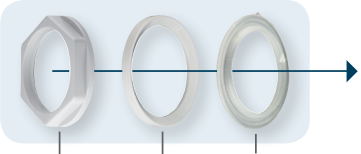

Nut (985600)

Gasket L Design (985700) or Flat Gasket (948601) Both Optional

Compensator Ring (985800)

Jet Body (985900-CL)
⅜″ Air Barbed x ¾″ Water Socket
With Check Valve (986300)

5″ Clear Jet Body Assembly

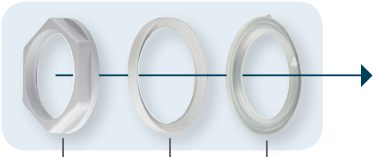

Nut (47940000)

Gasket L Design (946600) or Flat Gasket (47930000) Optional

Compensator Ring (47950000)

Jet Body (47970000-CL)
⅜″ Air Barbed x ¾″ Water Socket
With Check Valve (958100)

Your Single Source Solution. p 714.384.0384 | f 714.384.0385

We reserve the right to change technical data without further notice.
No copies authorized. All rights reserved. ©2014 Balboa Water Group

Balboa's jets have soothed and relaxed the world for years. Our pioneering jets have come in many designs that were created to stimulate your senses in different ways. Now add light! Balboa's new Light Up Jets will change your experience of what relaxation in a spa really means.

Venice Jets	
2" LIGHT UP VENICE DIRECT FLOW	902500-XX*
2" LIGHT UP VENICE DIRECTIONAL	902501-XX*
3.5" LIGHT UP VENICE DIRECTIONAL	9035500-XX*
3.5" LIGHT UP VENICE PIN SPIN	9035504-XX*
3.5" LIGHT UP VENICE PULSATOR	9035502-XX*
3.5" LIGHT UP VENICE SWIRL	9035501-XX*
3" LIGHT UP VENICE DIRECTIONAL	903500-XX*
3" LIGHT UP VENICE PIN SPIN	903504-XX*
3" LIGHT UP VENICE PULSATOR	903502-XX*
3" LIGHT UP VENICE SWIRL	903501-XX*
5" LIGHT UP VENICE DIRECTIONAL	905500-XX*
5" LIGHT UP VENICE PIN SPIN	905504-XX*
5" LIGHT UP VENICE PULSATOR	905502-XX*
5" LIGHT UP VENICE SWIRL	905501-XX*
5" LIGHT UP VENICE TWIN SPIN	905503-XX*

Pismo Jets	
3.5" SS LIGHT UP PISMO DIRECTIONAL	983530-XX*
3.5" SS LIGHT UP PISMO PIN SPIN	983534-XX*
3.5" SS LIGHT UP PISMO SWIRL	983531-XX*
3.5" LIGHT UP PISMO DIRECTIONAL	903530-XX*
3.5" LIGHT UP PISMO PIN SPIN	903534-XX*
3.5" LIGHT UP PISMO SWIRL	903531-XX*
3" LIGHT UP PISMO PIN SPIN	903304-XX*
3" LIGHT UP PISMO SWIRL	903301-XX*
3" SS LIGHT UP PISMO NECK JET CLR EYEBALL	983305-XX*
3" SS LIGHT UP PISMO PIN SPIN	983304-XX*
3" SS LIGHT UP PISMO SWIRL	983301-XX*
3" LIGHT UP MCYII NECK JET CLR EYEBALL	903305-XX*
5" SS LIGHT UP PISMO DIRECTIONAL	985300-XX*
5" SS LIGHT UP PISMO PIN SPIN	985304-XX*
5" SS LIGHT UP PISMO SCYC DIRECTIONAL	985307-XX*
5" SS LIGHT UP PISMO SWIRL	985301-XX*
5" LIGHT UP PISMO DIRECTIONAL	905300-XX*
5" LIGHT UP PISMO PIN SPIN	905304-XX*
5" LIGHT UP PISMO SUPER CYC DIRECTIONAL	905307-XX*
5" LIGHT UP PISMO SWIRL	905301-XX*

* = XX represents the different jet colors. Replace XX with the correct jet color before ordering. See all the colors at www.balboawater.com/color-codes. Minimum quanity required please contact Balboa Water for more details.

Your Single Source Solution. p 714.384.0384 | f 714.384.0385

We reserve the right to change technical data without further notice.
No copies authorized. All rights reserved. ©2014 Balboa Water Group

PismoJetCollection

Spa 2″ Stainless Steel Over Plastic Jets

Fitting Structure

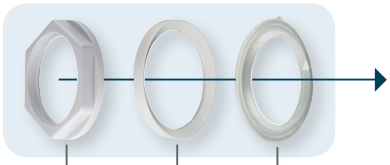

Nut (985734)

Gasket L Design (943506)

Compensator Ring (943509)

Jet Body (947600)
⅜″ air barbed x ¾″ water barbed

Jet Body (947700)
⅜″ air barbed x ¾″ water socket

Hole Sizes

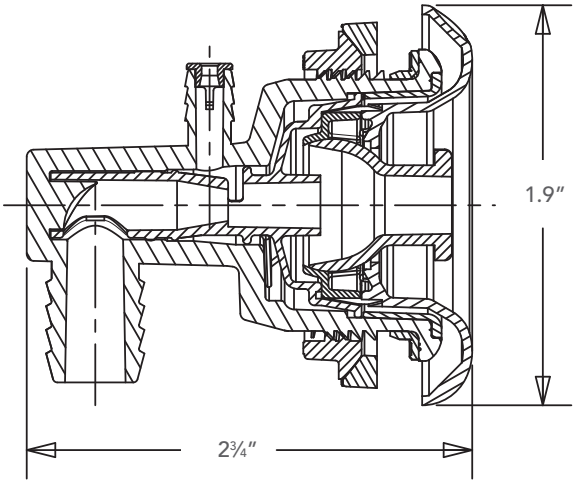

Hole Size: 1½″ L Gasket
Torque Foot Pound: 5
GPM: 6.5 @ 15 PSI
Orifice: .25 (¼″)

Your Single Source Solution. p 714.384.0384 | f 714.384.0385

We reserve the right to change technical data without further notice.
No copies authorized. All rights reserved. ©2014 Balboa Water Group

2″ Pismo Jets

2″ Fixed Stainless Steel
Over Plastic Jet (982300-XX)

2″ Directional Stainless Steel
Over Plastic Jet (982301-XX)

2″ Swirl Stainless Steel
Over Plastic Jet (982302-XX)

Available Colors

BK = Black CG = Grey MG = Metallic Grey WH = White

Note: Replace XX with the corresponding color before ordering.

Your Single Source Solution. p 714.384.0384 | f 714.384.0385

We reserve the right to change technical data without further notice.
No copies authorized. All rights reserved. ©2014 Balboa Water Group

BALBOA water group

PismoJetCollection

Spa 3″ Stainless Steel Over Plastic Jets

Fitting Structure

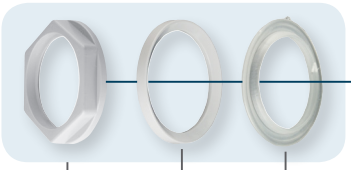

Nut (955900)

Gasket L Design (959000)

Compensator Ring (90095100)

Jet Body (90094900)
⅜″ air barbed x ¾″ water socket

Jet Body (90094800)
⅜″ air barbed x ¾″ water barbed

Hole Sizes

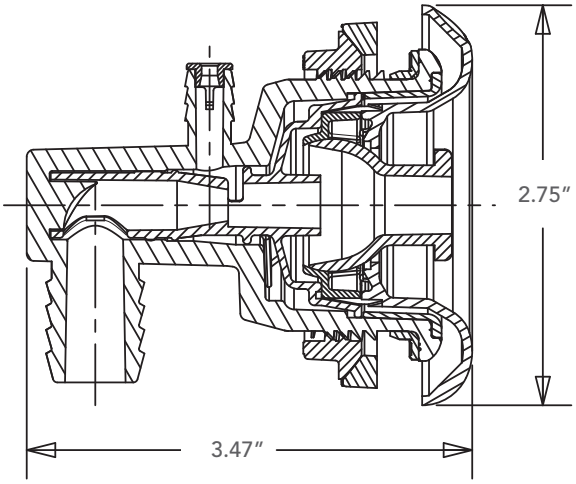

Hole Size: 2.125″ L Gasket
Torque Foot Pound: 9-11
GPM: 9½ @ 15 PSI
Orifice: .28 (9/32″)

Your Single Source Solution. p 714.384.0384 | f 714.384.0385

We reserve the right to change technical data without further notice.
No copies authorized. All rights reserved. ©2014 Balboa Water Group

3″ Pismo Jets

3″ Directional Stainless Steel Over Plastic Jet (983300-XX)

3″ Swirl Stainless Steel Over Plastic Jet (983301-XX)

3″ Pulsator Stainless Steel Over Plastic Jet (983302-XX)

3″ Twin Spin Stainless Steel Over Plastic Jet (983303-XX)

3″ Pin Spin Stainless Steel Over Plastic Jet (983304-XX)

3 Inch Neck Jet

3″ Neck Jet Stain Steel Over Plastic (983305-XX)

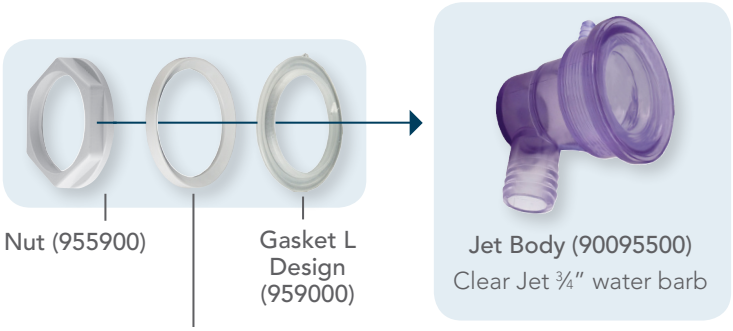

Available Colors

BK = Black CG = Grey MG = Metallic Grey WH = White

Note: Replace XX with the corresponding color before ordering.

Your Single Source Solution. p 714.384.0384 | f 714.384.0385

We reserve the right to change technical data without further notice.
No copies authorized. All rights reserved. ©2014 Balboa Water Group

BALBOA water group

PismoJetCollection

Spa 3.5″ Stainless Steel Over Plastic Jets

Fitting Structure

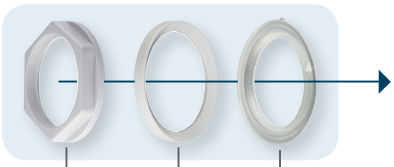

Nut (985600)

Gasket L Design (985700) or Flat Gasket (948601) Optional

Compensator Ring (985800)

Jet Body (985900)
⅜″ Air Barbed x ¾″ Water Barbed.
With Check Valve (986200)

Jet Body (986000)
⅜″ Air Barbed x ¾″ Water Socket
With Check Valve (986300)

Hole Sizes

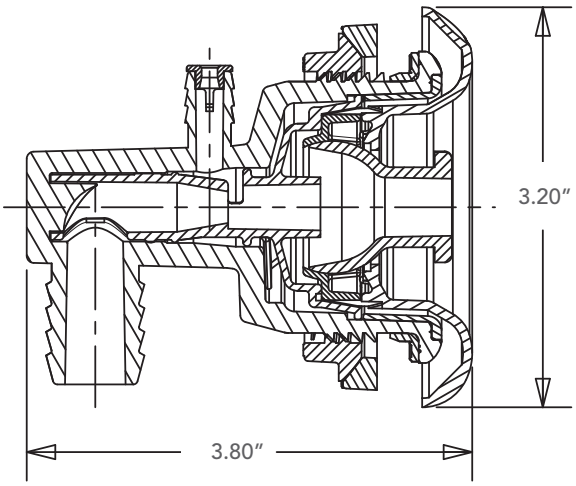

Hole Size: 2.56″ L Gasket or 2.5″ Flat Gasket
Torque Foot Pound: 15-18
GPM: 12 @ 15 PSI
Orifice: .38 (⅜″)

Your Single Source Solution. p 714.384.0384 | f 714.384.0385

We reserve the right to change technical data without further notice.
No copies authorized. All rights reserved. ©2014 Balboa Water Group

3.5 Inch Jets

3.5″ Directional Stainless Steel Over Plastic Jet (983530-XX)

3.5″ Swirl Stainless Steel Over Plastic Jet (983531-XX)

3.5″ Pulsator Stainless Steel Over Plastic Jet (983532-XX)

3.5″ Twin Spin Stainless Steel Over Plastic Jet (983533-XX)

3.5″ Pin Spin Stainless Steel Over Plastic Jet (983534-XX)

Available Colors

BK = Black CG = Grey MG = Metallic Grey WH = White

Note: Replace XX with the corresponding color before ordering.

Your Single Source Solution. p 714.384.0384 | f 714.384.0385

We reserve the right to change technical data without further notice.
No copies authorized. All rights reserved. ©2014 Balboa Water Group

BALBOA water group

PismoJetCollection

Spa 5″ Stainless Steel Over Plastic Jets

Fitting Structure

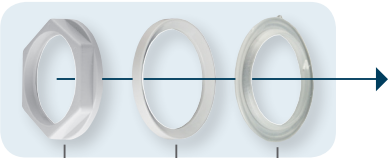

Nut (47940000)

Compensator Ring (47950000)

Gasket L Design (946600) or Flat Gasket (47930000) Optional

Jet Body (47970000)
⅜″ Air Barbed x ¾″
Water Barbed
With Check Valve (960200)

Jet Body (47960000)
⅜″ Air Barbed x ¾″
Water Socket
With Check Valve (958100)

Hole Sizes

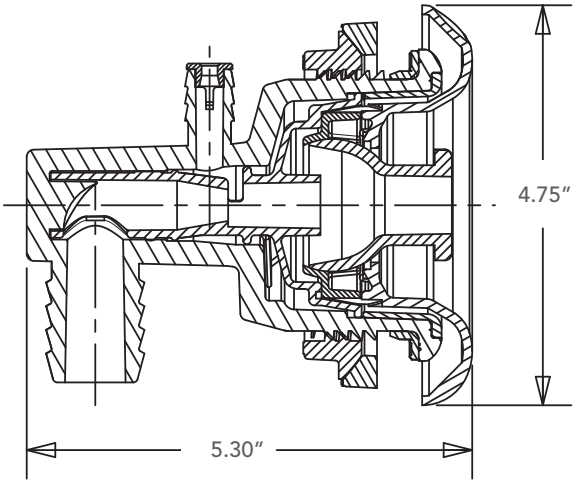

Hole Size: 3.75″ Flat Gasket or 3.90″ L Gasket
Torque Foot Pound: 28
GPM: 16 @ 15 PSI
Orifice: .38 (⅜″)

Your Single Source Solution. p 714.384.0384 | f 714.384.0385

We reserve the right to change technical data without further notice.
No copies authorized. All rights reserved. ©2014 Balboa Water Group

5 Inch Jets

5″ Directional Stainless Steel Over Plastic Jet (985300-XX)

5″ Swirl Stainless Steel Over Plastic Jet (985301-XX)

5″ Pulsator Stainless Steel Over Plastic Jet (985302-XX)

5″ Twin Spin Stainless Steel Over Plastic Jet (985303-XX)

5″ Pin Spin Stainless Steel Over Plastic Jet (985304-XX)

5″ Round Shower Head Stainless Steel Over Plastic Jet (985305-XX)

5″ Oval Shower Head Spin Stainless Steel Over Plastic Jet (985306-XX)

Available Colors

BK = Black CG = Grey MG = Metallic Grey WH = White

Note: Replace XX with the corresponding color before ordering.

Your Single Source Solution. p 714.384.0384 | f 714.384.0385

We reserve the right to change technical data without further notice.
No copies authorized. All rights reserved. ©2014 Balboa Water Group

BALBOA water group

PismoJetCollection

Spa 7″ Plastic Over Stainless Steel Jets

7″ Round Ultra Blaster
Stainless Steel Over
Plastic Jet (287701-XX)
Round Ultra Blaster jet nozzle

Hole Sizes

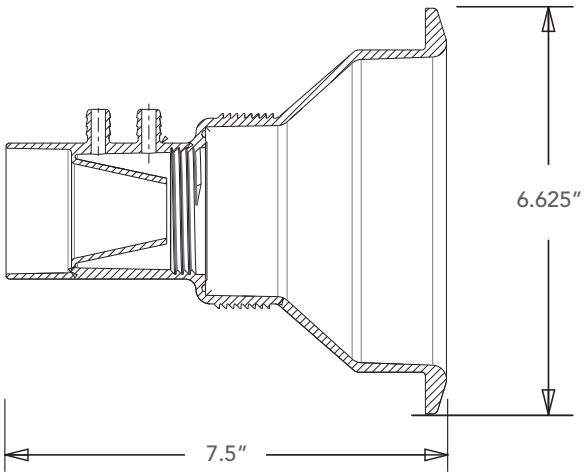

Hole Size: 6″
Torque Foot Pound: 20

Available Colors

- BK = Black
- CG = Grey
- MG = Metallic Grey
- WH = White

Note: Replace XX with the corresponding color before ordering.

Your Single Source Solution. p 714.384.0384 | f 714.384.0385
We reserve the right to change technical data without further notice.
No copies authorized. All rights reserved. ©2014 Balboa Water Group

NOTES:

Your Single Source Solution. p 714.384.0384 | f 714.384.0385

We reserve the right to change technical data without further notice.
No copies authorized. All rights reserved. ©2014 Balboa Water Group

BALBOA water group

VeniceJetCollection

Spa 2″ Plastic Over Stainless Steel Jets

Fitting Structure

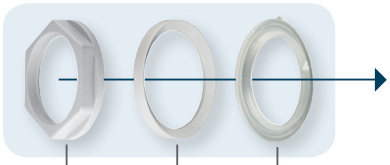

Nut (985734)

Gasket L Design (943506)

Compensator Ring (943509)

Jet Body (947600)
⅜″ air barbed x ¾″ water barbed

Jet Body (947700)
⅜″ air barbed x ¾″ water socket

Hole Sizes

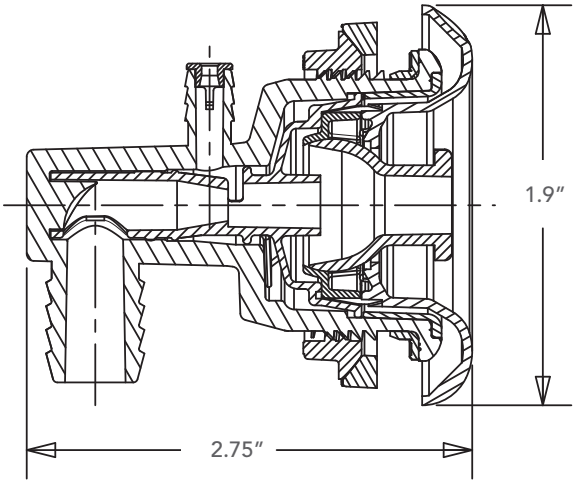

Hole Size: 1½″ L Gasket
Torque Foot Pound: 5
GPM: 6.5 @ 15 PSI
Orifice: .25 (¼″)

Your Single Source Solution. p 714.384.0384 | f 714.384.0385

We reserve the right to change technical data without further notice.
No copies authorized. All rights reserved. ©2014 Balboa Water Group

2″ Venice Jets

2″ Fixed Plastic Over Stainless Steel Jet (982500-XX)

2″ Directional Plastic Over Stainless Steel Jet (982501-XX)

2″ Swirl Plastic Over Stainless Steel Jet (982502-XX)

Available Colors

BK = Black CG = Grey MG = Metallic Grey WH = White

Note: Replace XX with the corresponding color before ordering.

Your Single Source Solution. p 714.384.0384 | f 714.384.0385

We reserve the right to change technical data without further notice.
No copies authorized. All rights reserved. ©2014 Balboa Water Group

BALBOA water group

VeniceJetCollection

Spa 3″ Plastic Over Stainless Steel Jets

Fitting Structure

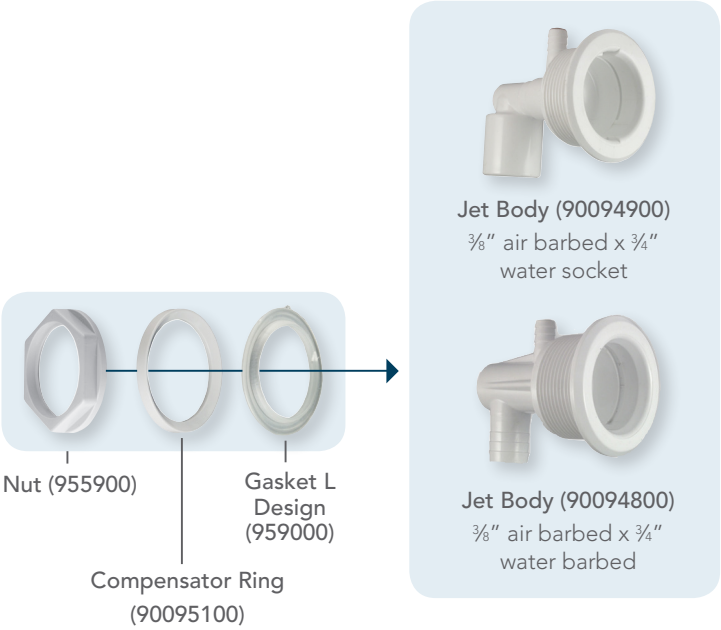

Hole Sizes

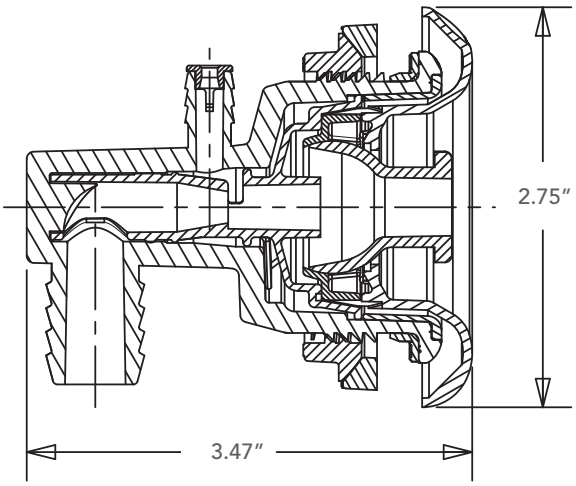

Hole Size: 2.125″ L Gasket
Torque Foot Pound: 9-11
GPM: 9½ @ 15 PSI
Orifice: .28 (9⁄32″)

Your Single Source Solution. p 714.384.0384 | f 714.384.0385

We reserve the right to change technical data without further notice.
No copies authorized. All rights reserved. ©2014 Balboa Water Group

3″ Venice Jets

3″ Directional Plastic Over Stainless Steel Jet (983500-XX)

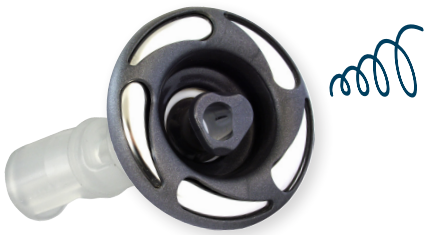

3″ Swirl Plastic Over Stainless Steel Jet (983501-XX)

3″ Pulsator Plastic Over Stainless Steel Over (983502-XX)

3″ Twin Spin Plastic Over Stainless Steel Jet (983503-XX)

3″ Pin Spin Plastic Over Stainless Steel Jet (983504-XX)

3 Inch Neck Jet

3″ Neck Jet Plastic Over Stain Steel (983505-XX)

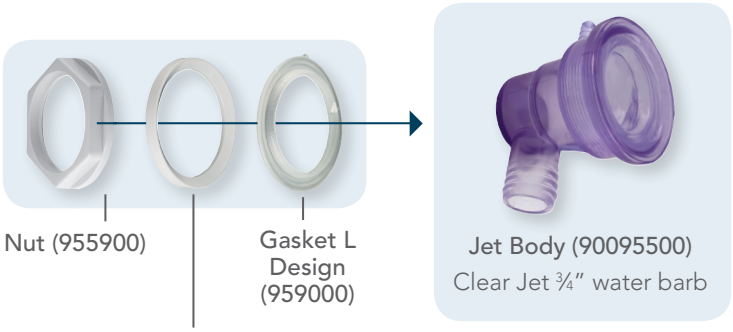

Available Colors

BK = Black CG = Grey MG = Metallic Grey WH = White

Note: Replace XX with the corresponding color before ordering.

Your Single Source Solution. p 714.384.0384 | f 714.384.0385

We reserve the right to change technical data without further notice.
No copies authorized. All rights reserved. ©2014 Balboa Water Group

BALBOA water group

VeniceJetCollection

Spa 3.5″ Plastic Over Stainless Steel Jets

Fitting Structure

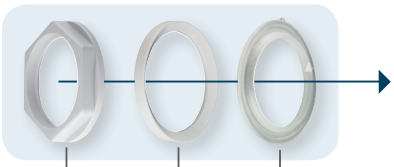

Nut (985600)

Gasket L Design (985700) or Flat Gasket (948601) Optional

Compensator Ring (985800)

Jet Body (985900)
⅜″ Air Barbed x ¾″ Water Barbed.
With Check Valve (986200)

Jet Body (986000)
⅜″ Air Barbed x ¾″ Water Socket
With Check Valve (986300)

Hole Sizes

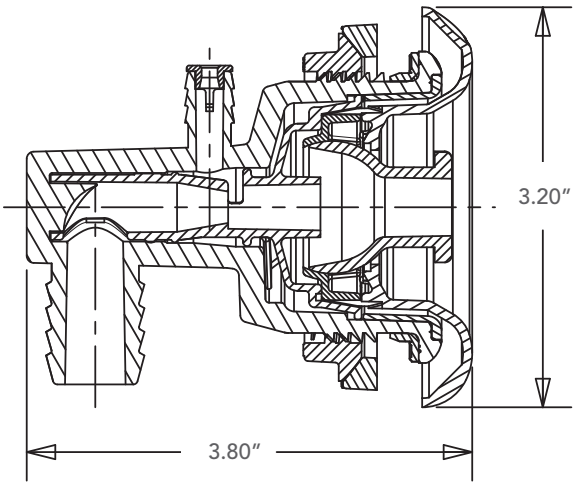

Hole Size: 2.56″ L Gasket or 2.5″ Flat Gasket
Torque Foot Pound: 15-18
GPM: 12 @ 15 PSI
Orifice: .38 (⅜″)

Your Single Source Solution. p 714.384.0384 | f 714.384.0385

We reserve the right to change technical data without further notice.
No copies authorized. All rights reserved. ©2014 Balboa Water Group

3.5″ Venice Jets

3.5″ Directional Plastic Over Stainless Steel Jet (9835500-XX)

3.5″ Swirl Plastic Over Stainless Steel Jet (9835501-XX)

3.5″ Pulsator Plastic Over Stainless Steel Over (9835502-XX)

3.5″ Twin Spin Plastic Over Stainless Steel Jet (9835503-XX)

3.5″ Pin Spin Plastic Over Stainless Steel Jet (9835504-XX)

Available Colors

BK = Black CG = Grey MG = Metallic Grey WH = White

Note: Replace XX with the corresponding color before ordering.

Your Single Source Solution. p 714.384.0384 | f 714.384.0385

We reserve the right to change technical data without further notice.
No copies authorized. All rights reserved. ©2014 Balboa Water Group

BALBOA water group

VeniceJetCollection

Spa 5″ Plastic Over Stainless Steel Jets

Fitting Structure

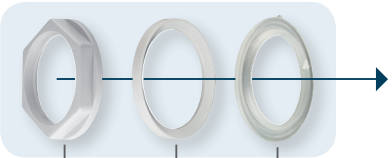

Nut (47940000)

Compensator Ring (47950000)

Gasket L Design (946600) or Flat Gasket (47930000) Optional

Jet Body (47970000)
⅜″ Air Barbed x ¾″
Water Barbed
With Check Valve (960200)

Jet Body (47960000)
⅜″ Air Barbed x ¾″
Water Socket
With Check Valve (958100)

Hole Sizes

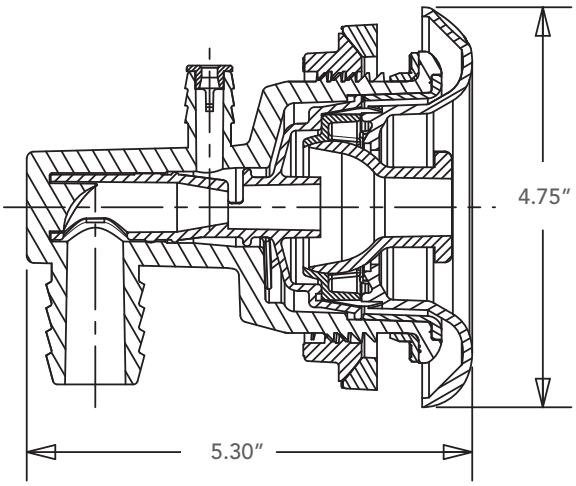

Hole Size: 3.75″ Flat Gasket or 3.90″ L Gasket
Torque Foot Pound: 28
GPM: 16 @ 15 PSI
Orifice: .38 (⅜″)

Your Single Source Solution. p 714.384.0384 | f 714.384.0385

We reserve the right to change technical data without further notice.
No copies authorized. All rights reserved. ©2014 Balboa Water Group

5″ Venice Jets

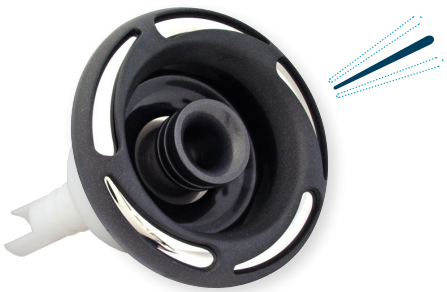

5″ Directional Plastic Over Stainless Steel Jet (985500-XX)

5″ Swirl Plastic Over Stainless Steel Jet (985501-XX)

5″ Pulsator Plastic Over Stainless Steel Over (985502-XX)

5″ Twin Spin Plastic Over Stainless Steel Jet (985503-XX)

5″ Pin Spin Plastic Over Stainless Steel Jet (985504-XX)

5″ Pin Spin Plastic Over Stainless Steel Jet (985505-XX)

5″ Twin Spin Plastic Over Stainless Steel Jet (985506-XX)

Available Colors

BK = Black CG = Grey MG = Metallic Grey WH = White

Note: Replace XX with the corresponding color before ordering.

Your Single Source Solution. p 714.384.0384 | f 714.384.0385

We reserve the right to change technical data without further notice.
No copies authorized. All rights reserved. ©2014 Balboa Water Group

BALBOA water group

VeniceJetCollection

Spa 7″ Plastic Over Stainless Steel Jets

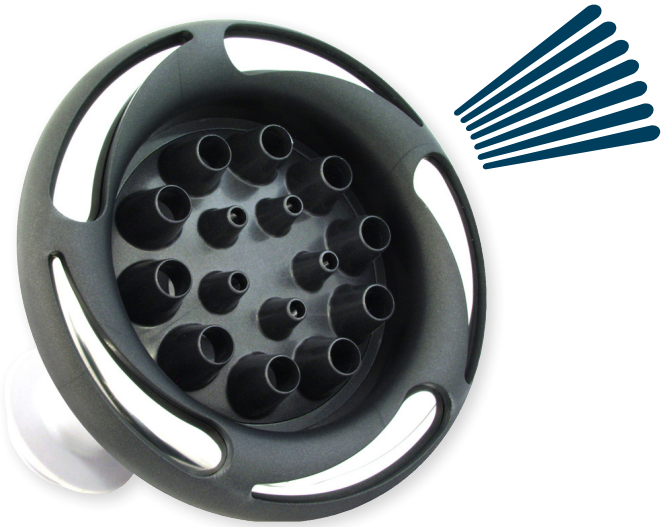

Round Ultra Blaster Plastic Over
Stainless Steel Jet (287705-XX)
Round Ultra Blaster jet nozzle

Hole Sizes

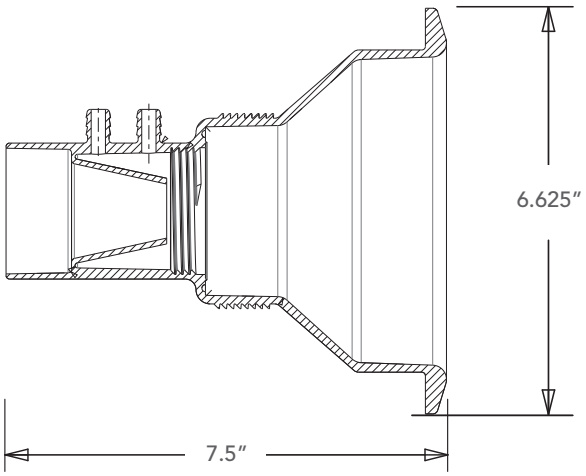

Hole Size: 6″
Torque Foot Pound: 20

Available Colors

- BK = Black
- CG = Grey
- MG = Metallic Grey
- WH = White

Note: Replace XX with the corresponding color before ordering.

Your Single Source Solution. p 714.384.0384 | f 714.384.0385
We reserve the right to change technical data without further notice.
No copies authorized. All rights reserved. ©2014 Balboa Water Group

NOTES:

Your Single Source Solution. p 714.384.0384 | f 714.384.0385

We reserve the right to change technical data without further notice.
No copies authorized. All rights reserved. ©2014 Balboa Water Group

BALBOA water group

LagunaJetCollection

Spa 2" Stainless Steel Jets

Fitting Structure

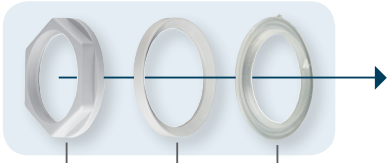

Nut (985734)

Gasket L Design (943506)

Compensator Ring (943509)

Jet Body (947600)
⅜" air barbed x ¾" water barbed

Jet Body (947700)
⅜" air barbed x ¾" water socket

Hole Sizes

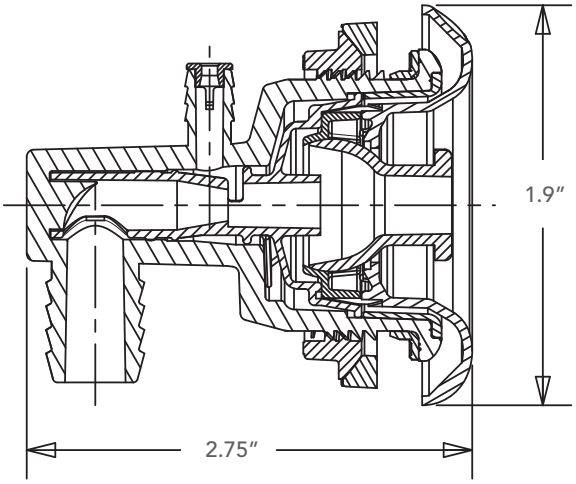

Hole Size: 1½" L Gasket
Torque Foot Pound: 5
GPM: 6.5 @ 15 PSI
Orifice: .25 (¼")

Your Single Source Solution. p 714.384.0384 | f 714.384.0385

We reserve the right to change technical data without further notice.
No copies authorized. All rights reserved. ©2014 Balboa Water Group

2″ Laguna Jets

2″ Fixed Stainless Steel Jet (940140YYY)

2″ Directional Stainless Steel Jet (940136YYY)

2″ Swirl Stainless Steel Jet (940815YYY)

Available Colors

11 = Black | WW = Grey | MG = Metallic Grey | 35 = Light Grey | 001 = White

Note: Replace YYY with the corresponding color before ordering.

Your Single Source Solution. p 714.384.0384 | f 714.384.0385

We reserve the right to change technical data without further notice.
No copies authorized. All rights reserved. ©2014 Balboa Water Group

BALBOA water group

LagunaJetCollection

Spa 3" Stainless Steel Jets

Fitting Structure

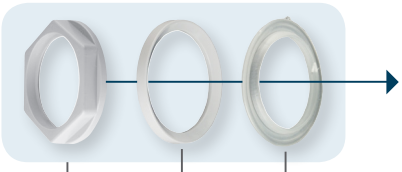

Nut (955900)

Gasket L Design (959000)

Compensator Ring (90095100)

Jet Body (90094900)
⅜" air barbed x ¾" water socket

Jet Body (90094800)
⅜" air barbed x ¾" water barbed

Hole Sizes

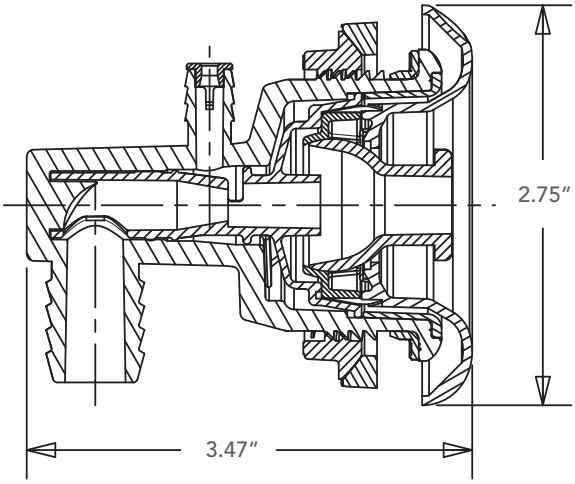

Hole Size: 2.125" L Gasket
Torque Foot Pound: 9-11
GPM: 9½ @ 15 PSI
Orifice: .28 (9/32")

Your Single Source Solution. p 714.384.0384 | f 714.384.0385

We reserve the right to change technical data without further notice.
No copies authorized. All rights reserved. ©2014 Balboa Water Group

3″ Laguna Jets

3″ Swirl Stainless Steel Jet (901080YYY)

3″ Twin Spin Stainless Steel Jet (901072YYY))

3″ Pulsator Stainless Steel Jet (901064YYY)

3″ Directional Stainless Steel Jet (901056YYY)

3″ Pin Spin Stainless Steel Jet (901048YYY)

Available Colors

11 = Black | WW = Grey | MG = Metallic Grey | 35 = Light Grey | 001 = White

Note: Replace YYY with the corresponding color before ordering.

Your Single Source Solution. p 714.384.0384 | f 714.384.0385

We reserve the right to change technical data without further notice.
No copies authorized. All rights reserved. ©2014 Balboa Water Group

BALBOA water group

LagunaJetCollection

Spa 3.5" Stainless Steel Jets

Fitting Structure

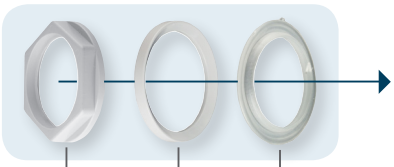

Nut (985600)

Gasket L Design (985700) or Flat Gasket (948601) Optional

Compensator Ring (985800)

Jet Body (985900)
⅜" Air Barbed x ¾"
Water Barbed.
With Check Valve (986200)

Jet Body (986000)
⅜" Air Barbed x ¾"
Water Socket
With Check Valve (986300)

Hole Sizes

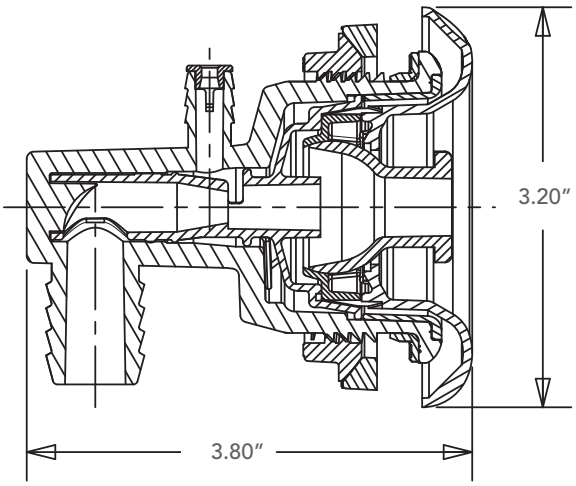

Hole Size: 2.56" L Gasket or 2.5" Flat Gasket
Torque Foot Pound: 15-18
GPM: 12 @ 15 PSI
Orifice: .38 (⅜")

Your Single Source Solution. p 714.384.0384 | f 714.384.0385

We reserve the right to change technical data without further notice.
No copies authorized. All rights reserved. ©2014 Balboa Water Group

3.5″ Laguna Jets

3.5″ Swirl Stainless Steel Jet (940133YYY)

3.5″ Pulsator Stainless Steel Jet (900819YYY)

3.5″ Directional Stainless Steel Jet (940138YYY)

3.5″ Pin Spin Stainless Steel Jet (901104YYY)

3.5″ Twin Spin Stainless Steel Jet (901096YYY)

Available Colors

11 = Black | WW = Grey | MG = Metallic Grey | 35 = Light Grey | 001 = White

Note: Replace YYY with the corresponding color before ordering.

Your Single Source Solution. p 714.384.0384 | f 714.384.0385

We reserve the right to change technical data without further notice.
No copies authorized. All rights reserved. ©2014 Balboa Water Group

BALBOA water group

LagunaJetCollection

Spa 4" Stainless Steel Jets

Fitting Structure

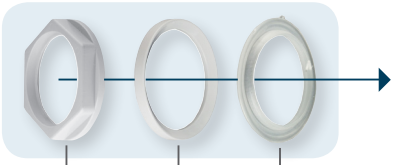

Nut (985600)

Gasket L Design (985700) or Flat Gasket (948601) Optional

Compensator Ring (985800)

Jet Body (985900)
⅜" Air Barbed x ¾"
Water Barbed.
With Check Valve (986200)

Jet Body (986000)
⅜" Air Barbed x ¾"
Water Socket
With Check Valve (986300)

Hole Sizes

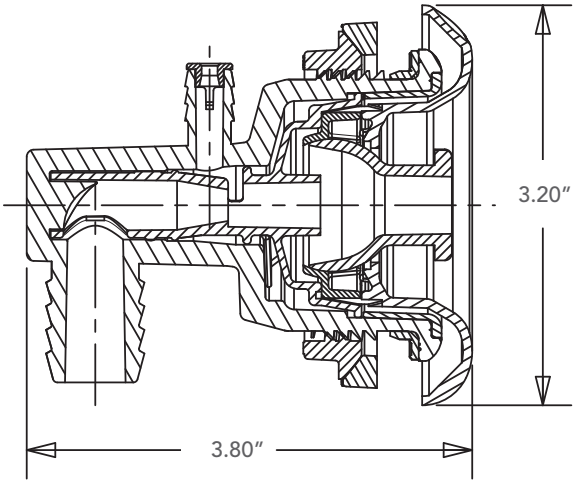

Hole Size: 2.56" L Gasket or 2.5" Flat Gasket
Torque Foot Pound: 15-18
GPM: 12 @ 15 PSI
Orifice: .38 (⅜")

Your Single Source Solution. p 714.384.0384 | f 714.384.0385

We reserve the right to change technical data without further notice.
No copies authorized. All rights reserved. ©2014 Balboa Water Group

4″ Laguna Jets

4″ Swirl Stainless Steel Jet (940132YYY)

4″ Pulsator Stainless Steel Jet (900820YYY)

4″ Directional Stainless Steel Jet (940139YYY)

Available Colors

11 = Black | WW = Grey | MG = Metallic Grey | 35 = Light Grey | 001 = White

Note: Replace YYY with the corresponding color before ordering.

Your Single Source Solution. p 714.384.0384 | f 714.384.0385

We reserve the right to change technical data without further notice.
No copies authorized. All rights reserved. ©2014 Balboa Water Group

BALBOA water group

LagunaJetCollection

Spa 5″ Stainless Steel Jets

Fitting Structure

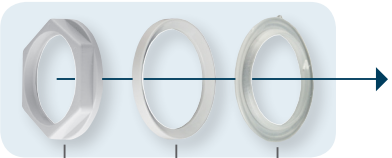

Nut (47940000)

Compensator Ring (47950000)

Gasket L Design (946600) or Flat Gasket (47930000) Optional

Jet Body (47970000)
⅜″ Air Barbed x ¾″ Water Barbed
With Check Valve (960200)

Jet Body (47960000)
⅜″ Air Barbed x ¾″ Water Socket
With Check Valve (958100)

Hole Sizes

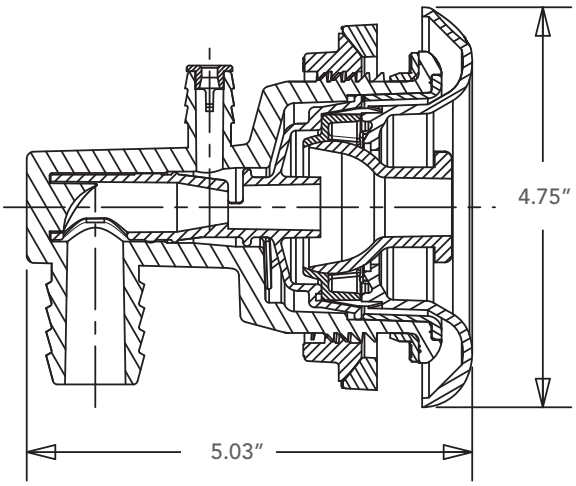

Hole Size: 3.75″ Flat Gasket or 3.90″ L Gasket
Torque Foot Pound: 28
GPM: 16 @ 15 PSI
Orifice: .38 (⅜″)

Your Single Source Solution. p 714.384.0384 | f 714.384.0385

We reserve the right to change technical data without further notice.
No copies authorized. All rights reserved. ©2014 Balboa Water Group

5″ Laguna Jets

5″ Swirl Stainless Steel Jet (900118YYY)

5″ Twin Spin Stainless Steel Jet (900121YYY)

5″ Pulsator Stainless Steel Jet (900120YYY)

5″ Waterfall Stainless Steel Jet (900205YYY)

Go to pg. 54 to see the jet bodies

5″ Round Ultra Blaster Stainless Steel Jet (940282YYY)

5″ Oval Ultra Blaster Stainless Steel Jet (940283YYY)

5″ Directional Stainless Steel Jet (900119YYY)

5″ Pin Spin Stainless Steel Jet (901112YYY)

Available Colors

11 = Black | WW = Grey | MG = Metallic Grey | 35 = Light Grey | 001 = White

Note: Replace YYY with the corresponding color before ordering.

Your Single Source Solution. p 714.384.0384 | f 714.384.0385

We reserve the right to change technical data without further notice.
No copies authorized. All rights reserved. ©2014 Balboa Water Group

BALBOA water group

LagunaJetCollection

Spa 7″ Stainless Steel Jets

7″ Round Ultra Blaster Stainless
Steel Over Plastic Jet (28725-XX)

Hole Sizes

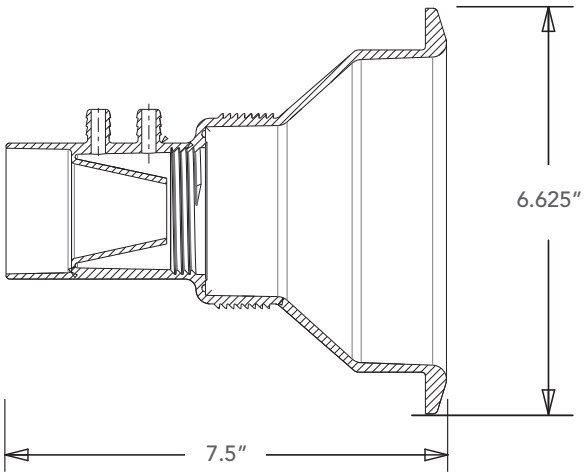

Hole Size: 6″
Torque Foot Pound: 20

Available Colors

- BK = Black
- CG = Grey
- MG = Metallic Grey
- WH = White

Note: Replace XX with the corresponding color before ordering.

Your Single Source Solution. p 714.384.0384 | f 714.384.0385
We reserve the right to change technical data without further notice.
No copies authorized. All rights reserved. ©2014 Balboa Water Group

NOTES:

Your Single Source Solution. p 714.384.0384 | f 714.384.0385

We reserve the right to change technical data without further notice.
No copies authorized. All rights reserved. ©2014 Balboa Water Group

BALBOA water group

LidoJetCollection

Spa 2″ Plastic Jets

Fitting Structure

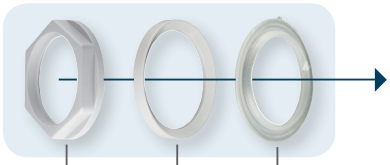

Nut (985734)

Gasket L Design (943506)

Compensator Ring (943509)

Jet Body (947600)
⅜″ air barbed x ¾″ water barbed

Jet Body (947700)
⅜″ air barbed x ¾″ water socket

Hole Sizes

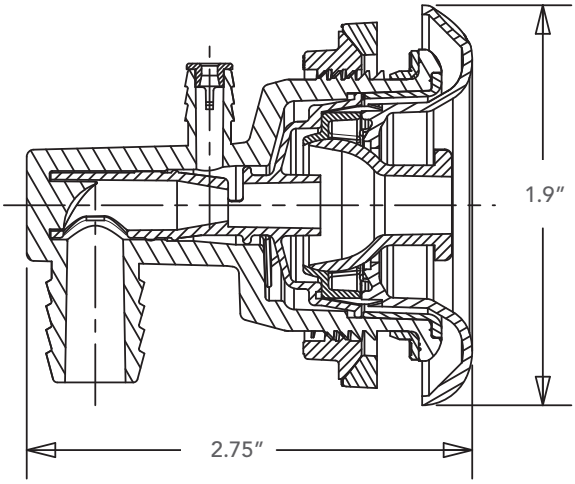

Hole Size: 1½″ L Gasket
Torque Foot Pound: 5
GPM: 6.5 @ 15 PSI
Orifice: .25 (¼″)

Your Single Source Solution. p 714.384.0384 | f 714.384.0385

We reserve the right to change technical data without further notice.
No copies authorized. All rights reserved. ©2014 Balboa Water Group

2″ Lido Jets

2″ Low Profile Textured Directional Plastic Jet (900137YYY)

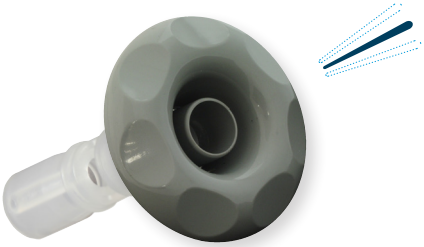

2″ Diamond Directional Plastic Jet (900138YYY)

2″ Emerald Directional Plastic Jet (900139YYY)

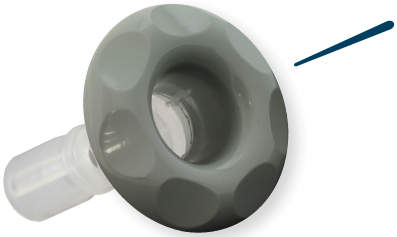

2″ Diamond Fixed Plastic Jet (900142YYY)

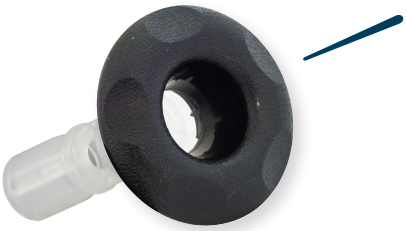

2″ Emerald Fixed Plastic Jet (900143YYY)

2″ Textured Swirl Plastic Jet (900145YYY)

2″ Diamond Swirl Plastic Jet (900146YYY)

2″ Emerald Swirl Plastic Jet (900147YYY)

2″ Low Profile Smooth Swirl Plastic Jet (900815YYY)

Available Colors

11 = Black | WW = Grey | MG = Metallic Grey | 35 = Light Grey | 001 = White

Note: Replace YYY with the corresponding color before ordering.

Your Single Source Solution. p 714.384.0384 | f 714.384.0385

We reserve the right to change technical data without further notice.
No copies authorized. All rights reserved. ©2014 Balboa Water Group

BALBOA water group

2″ Lido Jets

2″ Textured Fixed Plastic Jet (900875YYY)

2″ Textured Directional Plastic Jet (900876YYY)

Available Colors

11 = Black | WW = Grey | MG = Metallic Grey | 35 = Light Grey | 001 = White

Note: Replace YYY with the corresponding color before ordering.

Your Single Source Solution. p 714.384.0384 | f 714.384.0385

We reserve the right to change technical data without further notice.
No copies authorized. All rights reserved. ©2014 Balboa Water Group

NOTES:

Your Single Source Solution. p 714.384.0384 | f 714.384.0385

We reserve the right to change technical data without further notice.
No copies authorized. All rights reserved. ©2014 Balboa Water Group

BALBOA water group

LidoJetCollection

Spa 3″ Plastic Jets

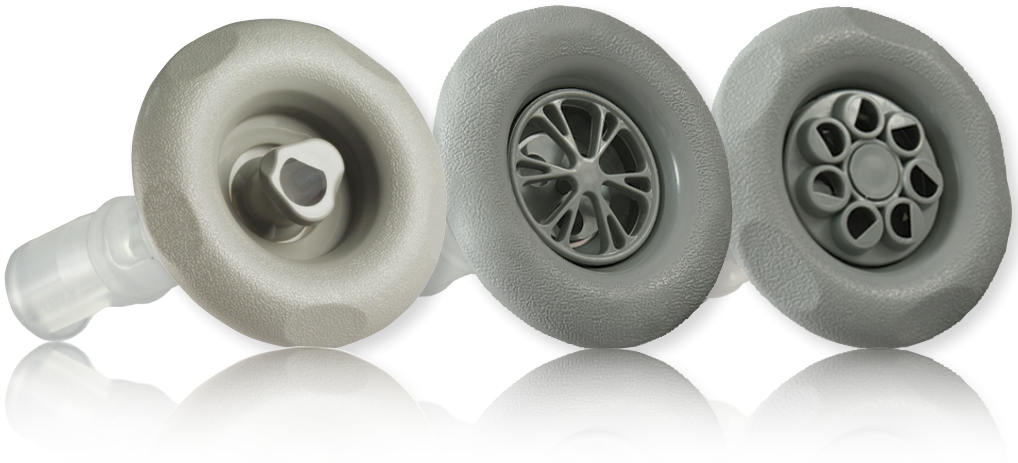

Fitting Structure

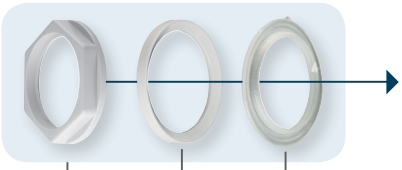

Nut (955900)

Gasket L Design (959000)

Compensator Ring (90095100)

Jet Body (90094900)
⅜″ air barbed x ¾″ water socket

Jet Body (90094800)
⅜″ air barbed x ¾″ water barbed

Hole Sizes

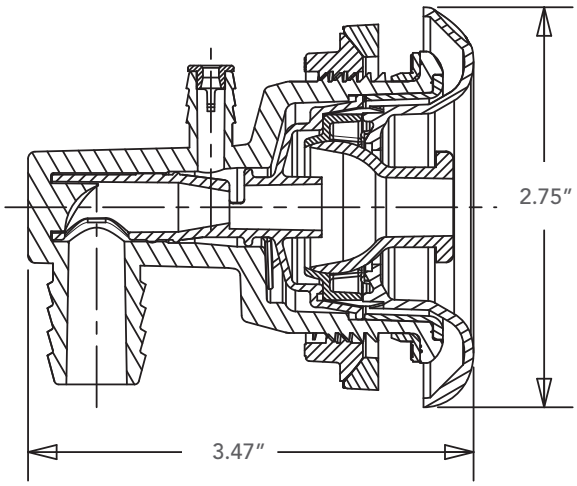

Hole Size: 2.125″ L Gasket
Torque Foot Pound: 9-11
GPM: 9½ @ 15 PSI
Orifice: .28 (9/32″)

Your Single Source Solution. p 714.384.0384 | f 714.384.0385

We reserve the right to change technical data without further notice.
No copies authorized. All rights reserved. ©2014 Balboa Water Group

3″ Lido Jets

3″ Emerald Pin Spin
Plastic Jet (901041YYY)

3″ Large Emerald Pin Spin
Plastic Jet (901042YYY)

3″ Textured Pin Spin
Plastic Jet (901045YYY)

3″ Emerald Directional
Plastic Jet (901049YYY)

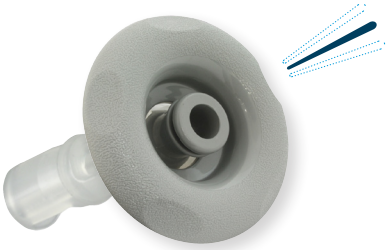

3″ Large Emerald Swirl
Plastic Jet (901050YYY)

3″ Textured Directional
Plastic Jet (901053YYY)

3″ Large Directional
Plastic Jet (901054YYY)

3″ Diamond Directional
Plastic Jet (901051YYY)

3″ Emerald Pulsator
Plastic Jet (901057YYY)

Available Colors

11 = Black | WW = Grey | MG = Metallic Grey | 35 = Light Grey | 001 = White

Note: Replace YYY with the corresponding color before ordering.

Your Single Source Solution. p 714.384.0384 | f 714.384.0385

We reserve the right to change technical data without further notice.
No copies authorized. All rights reserved. ©2014 Balboa Water Group

BALBOA water group

3″ Lido Jets

3″ Large Emerald Pulsator Plastic Jet (901058YYY)

3″ Textured Pulsator Plastic Jet (901061YYY)

3″ Large Textured Pulsator Plastic Jet (901062YYY)

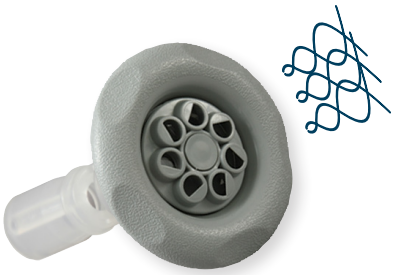

3″ Emerald Twin Spin Plastic Jet (901065YYY)

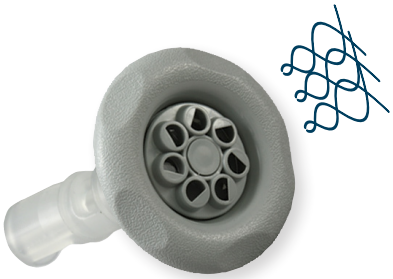

3″ Large Emerald Twin Spin Plastic Jet (901066YYY)

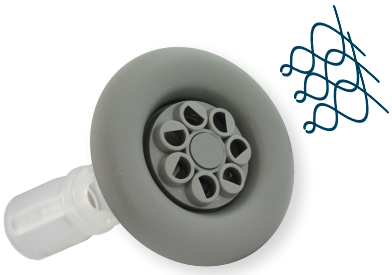

3″ Textured Twin Spin Plastic Jet (901069YYY)

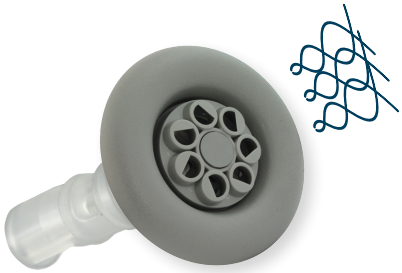

3″ Large Twin Spin Textured Plastic Jet (901070YYY)

3″ Emerald Swirl Plastic Jet (901073YYY)

3″ Large Emerald Swirl Plastic Jet (901074YYY)

Your Single Source Solution. p 714.384.0384 | f 714.384.0385

We reserve the right to change technical data without further notice.
No copies authorized. All rights reserved. ©2014 Balboa Water Group

3″ Lido Jets

3″ Textured Swirl Plastic Jet (901077YYY)

3″ Large Textured Swirl Plastic Jet (901078YYY)

Available Colors

11 = Black | WW = Grey | MG = Metallic Grey | 35 = Light Grey | 001 = White

Note: Replace YYY with the corresponding color before ordering.

Your Single Source Solution. p 714.384.0384 | f 714.384.0385

We reserve the right to change technical data without further notice.
No copies authorized. All rights reserved. ©2014 Balboa Water Group

BALBOA water group

LidoJetCollection

Spa 3.5″ Plastic Jets

Fitting Structure

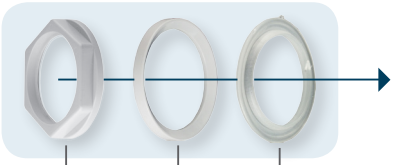

Nut (985600)

Gasket L Design (985700) or Flat Gasket (948601) Optional

Compensator Ring (985800)

Jet Body (985900)
⅜″ Air Barbed x ¾″ Water Barbed.
With Check Valve (986200)

Jet Body (986000)
⅜″ Air Barbed x ¾″ Water Socket
With Check Valve (986300)

Hole Sizes

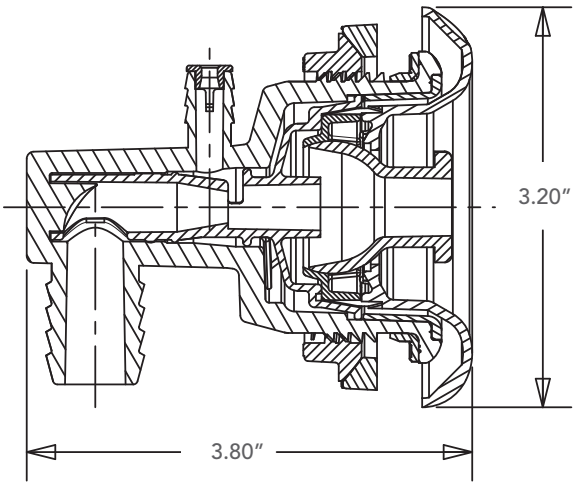

Hole Size: 2.56″ L Gasket or 2.5″ Flat Gasket
Torque Foot Pound: 15-18
GPM: 12 @ 15 PSI
Orifice: .38 (⅜″)

Your Single Source Solution. p 714.384.0384 | f 714.384.0385

We reserve the right to change technical data without further notice.
No copies authorized. All rights reserved. ©2014 Balboa Water Group

3.5″ Lido Jets

3.5″ Textured Pulsator Plastic Jet (940046YYY)

3.5″ Emerald Pulsator Plastic Jet (940048YYY)

3.5″ Diamond Pulsator Plastic Jet (940050YYY)

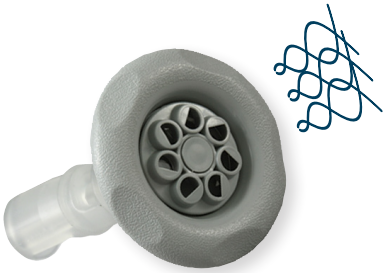

3.5″ Emerald Twin Spin Plastic Jet (901089YYY)

3.5″ Diamond Twin Spin Plastic Jet (901091YYY)

3.5″ Twin Spin Plastic Jet (901093YYY)

3.5″ Emerald Pin Spin Plastic Jet (901097YYY)

3.5″ Diamond Pin Spin Plastic Jet (901099YYY)

3.5″ Textured Directional Plastic Jet (9838YYY)

Available Colors

11 = Black | WW = Grey | MG = Metallic Grey | 35 = Light Grey | 001 = White

Note: Replace YYY with the corresponding color before ordering.

Your Single Source Solution. p 714.384.0384 | f 714.384.0385

We reserve the right to change technical data without further notice.
No copies authorized. All rights reserved. ©2014 Balboa Water Group

BALBOA water group

3.5″ Lido Jets

3″ Textured Swirl Plastic Jet (9840YYY)

3.5″ Emerald Directional Plastic Jet (9844YYY)

3.5″ Emerald Swirl Plastic Jet (9846YYY)

3.5″ Diamond Directional Plastic Jet (9850YYY)

3.5″ Diamond Swirl Plastic Jet (9852YYY)

Available Colors

11 = Black | WW = Grey | MG = Metallic Grey | 35 = Light Grey | 001 = White

Note: Replace YYY with the corresponding color before ordering.

Your Single Source Solution. p 714.384.0384 | f 714.384.0385

We reserve the right to change technical data without further notice.
No copies authorized. All rights reserved. ©2014 Balboa Water Group

NOTES:

Your Single Source Solution. p 714.384.0384 | f 714.384.0385

We reserve the right to change technical data without further notice.
No copies authorized. All rights reserved. ©2014 Balboa Water Group

BALBOA water group

LidoJetCollection

Spa 4″ Plastic Jets

Fitting Structure

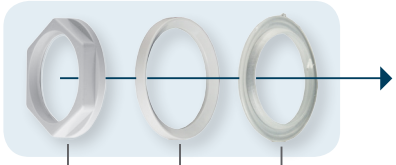

Nut (985600)

Gasket L Design (985700) or Flat Gasket (948601) Optional

Compensator Ring (985800)

Jet Body (985900)
⅜″ Air Barbed x ¾″ Water Barbed.
With Check Valve (986200)

Jet Body (986000)
⅜″ Air Barbed x ¾″ Water Socket
With Check Valve (986300)

Hole Sizes

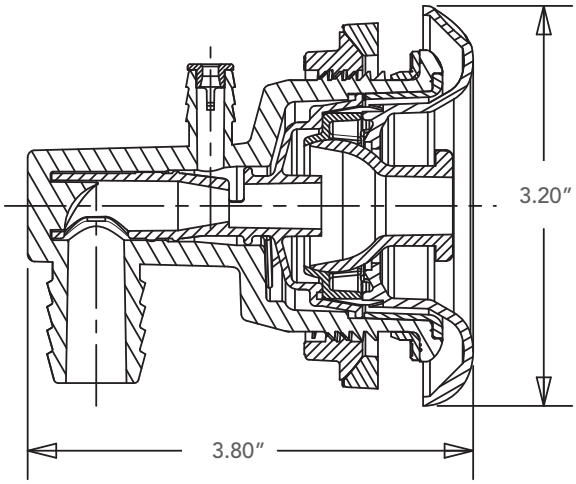

Hole Size: 2.56″ L Gasket or 2.5″ Flat Gasket
Torque Foot Pound: 15-18
GPM: 12 @ 15 PSI
Orifice: .38 (⅜″)

Your Single Source Solution. p 714.384.0384 | f 714.384.0385

We reserve the right to change technical data without further notice.
No copies authorized. All rights reserved. ©2014 Balboa Water Group

4″ Lido Jets

4″ Textured Twin Spin
Plastic Jet (901094YYY)

4″ Emerald Textured Pulsator
Plastic Jet (940049YYY)

4″ Diamond Pulsator
Plastic Jet (940051YYY)

4″ Textured Directional
Plastic Jet (9839YYY)

4″ Textured Swirl
Plastic Jet (9841YYY)

4″ Emerald Textured Directional
Plastic Jet (9845YYY)

4″ Emerald Textured Swirl
Plastic Jet (9847YYY)

4″ Diamond Smooth Directional
Plastic Jet (9851YYY)

4″ Diamond Smooth Swirl
Plastic Jet (9853YYY)

Available Colors

11 = Black | WW = Grey | MG = Metallic Grey | 35 = Light Grey | 001 = White

Note: Replace YYY with the corresponding color before ordering.

Your Single Source Solution. p 714.384.0384 | f 714.384.0385

We reserve the right to change technical data without further notice.
No copies authorized. All rights reserved. ©2014 Balboa Water Group

BALBOA water group

LidoJetCollection

Spa 5″ Plastic Jets

Fitting Structure

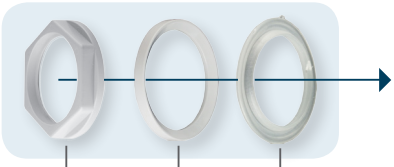

Nut (47940000)

Gasket L Design (946600) or Flat Gasket (47930000) Optional

Compensator Ring (47950000)

Jet Body (47970000)
⅜″ Air Barbed x ¾″
Water Barbed
With Check Valve (960200)

Jet Body (47960000)
⅜″ Air Barbed x ¾″
Water Socket
With Check Valve (958100)

Hole Sizes

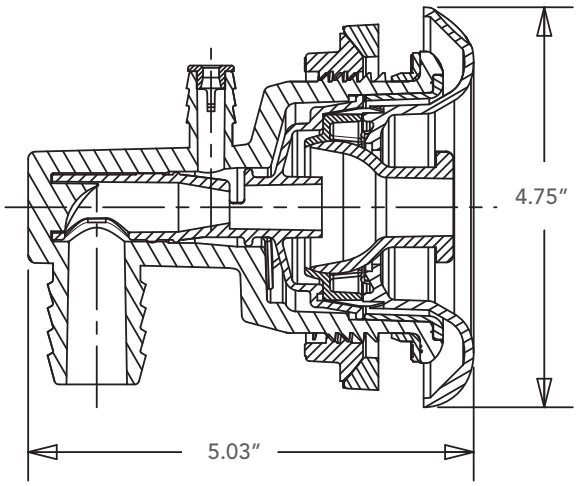

Hole Size: 3.75″ Flat Gasket or 3.90″ L Gasket
Torque Foot Pound: 28
GPM: 16 @ 15 PSI
Orifice: .38 (⅜″)

Your Single Source Solution. p 714.384.0384 | f 714.384.0385

We reserve the right to change technical data without further notice.
No copies authorized. All rights reserved. ©2014 Balboa Water Group

5″ Lido Jets

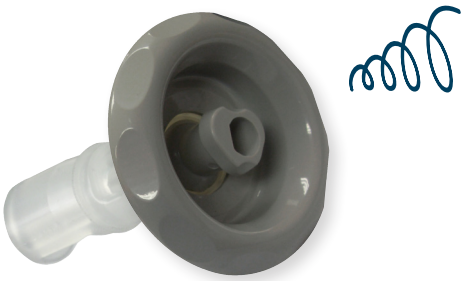

5″ Diamond Smooth Swirl Plastic Jet (9415YYY)

5″ Diamond Smooth Directional Plastic Jet (9416YYY)

5″ Emerald Textured Twin Spin Plastic Jet (9510YYY)

5″ Emerald Textured Pulsator Plastic Jet (9511YYY)

5″ Diamond Smooth Twin Spin Plastic Jet (9693YYY)

5″ Diamond Textured Pulsator Plastic Jet (9781YYY)

5″ Textured Directional Plastic Jet (9782YYY)

5″ Textured Swirl Plastic Jet (9783YYY)

5″ Textured Twin Spin Plastic Jet (9784YYY)

Available Colors

11 = Black | WW = Grey | MG = Metallic Grey | 35 = Light Grey | 001 = White

Note: Replace YYY with the corresponding color before ordering.

Your Single Source Solution. p 714.384.0384 | f 714.384.0385

We reserve the right to change technical data without further notice.
No copies authorized. All rights reserved. ©2014 Balboa Water Group

BALBOA water group

5″ Lido Jets

5″ Textured Pulsator Plastic Jet (9785YYY)

5″ Emerald Textured Pin Spin Plastic Jet (901105YYY)

5″ Emerald Round Shower Head Plastic Jet (940246YYY)

5″ Diamond Oval Shower Head Plastic Jet (940249YYY)

5″ Emerald Oval Shower Head Plastic Jet (940250YYY)

5″ Emerald Textured Swirl Plastic Jet (944511YYY)

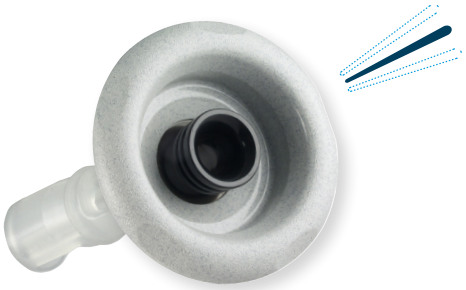

5″ Emerald Textured Directional Plastic Jet (944530YYY)

Available Colors

11 = Black | WW = Grey | MG = Metallic Grey | 35 = Light Grey | 001 = White

Note: Replace YYY with the corresponding color before ordering.

Your Single Source Solution. p 714.384.0384 | f 714.384.0385

We reserve the right to change technical data without further notice.
No copies authorized. All rights reserved. ©2014 Balboa Water Group

NOTES:

Your Single Source Solution. p 714.384.0384 | f 714.384.0385

We reserve the right to change technical data without further notice.
No copies authorized. All rights reserved. ©2014 Balboa Water Group

BALBOA water group

LidoJetCollection

Spa 5" Large Plastic Jets

Fitting Structure

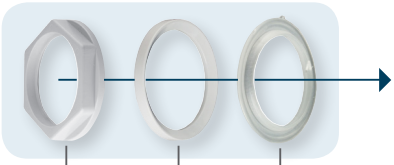

Nut (47940000)

Gasket L Design (946600) or Flat Gasket (47930000) Optional

Compensator Ring (47950000)

Jet Body (90093800)
⅜" Air Barbed x 1½"Water Socket
With Check Valve (90093400)

Jet Body (90094100)
½" Air Socket x 1½" Water Socket
With Check Valve (90093600)

Jet Body (90093900)
⅜" Air Barbed x 2" Water Socket
With Check Valve (90093500)

Jet Body (90094000)
½" Air Socket x 2" Water Socket
With Check Valve (90093700)

Your Single Source Solution. p 714.384.0384 | f 714.384.0385

We reserve the right to change technical data without further notice.
No copies authorized. All rights reserved. ©2014 Balboa Water Group

5″ Lido Jets

5″ Large Emerald Waterfall Plastic Jet (900927YYY)

5″ Large Textured Waterfall Plastic Jet (900929YYY)

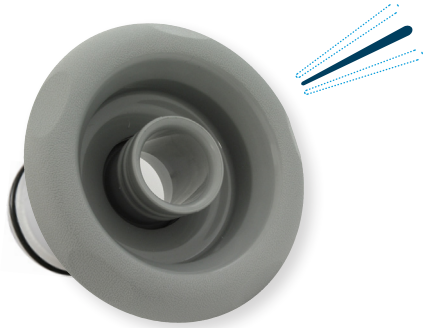

5″ Large Emerald Directional Plastic Jet (900931YYY)

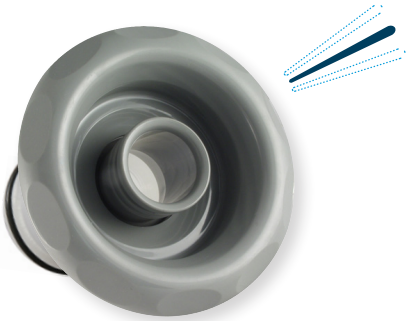

5″ Large Diamond Directional Plastic Jet (900932YYY)

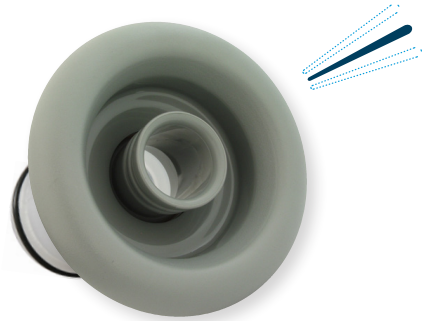

5″ Large Textured Directional Plastic Jet (900933YYY)

Available Colors

11 = Black | WW = Grey | MG = Metallic Grey | 35 = Light Grey | 001 = White

Note: Replace YYY with the corresponding color before ordering.

Your Single Source Solution. p 714.384.0384 | f 714.384.0385

We reserve the right to change technical data without further notice.
No copies authorized. All rights reserved. ©2014 Balboa Water Group

BALBOA water group

LidoJetCollection

Spa 6.5″ Plastic Jets

Fitting Structure

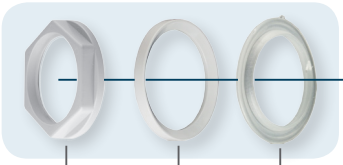

Nut (47940000)

Gasket L Design (946600) or Flat Gasket (47930000) Optional

Compensator Ring (47950000)

Jet Body (47970000)
⅜″ Air Barbed x ¾″
Water Barbed
With Check Valve (960200)

Jet Body (47960000)
⅜″ Air Barbed x ¾″
Water Socket
With Check Valve (958100)

Hole Sizes

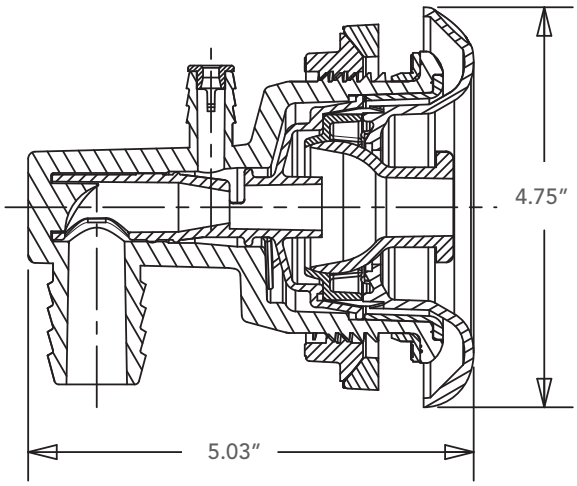

Hole Size: 3.75″ Flat Gasket or 3.90″ L Gasket
Torque Foot Pound: 28
GPM: 16 @ 15 PSI
Orifice: .38 (⅜″)

Your Single Source Solution. p 714.384.0384 | f 714.384.0385

We reserve the right to change technical data without further notice.
No copies authorized. All rights reserved. ©2014 Balboa Water Group

6.5″ Lido Jets

6.5″ Diamond Pin Spin Plastic Jet (901108YYY)

6.5″ Emerald Swirl Plastic Jet (940257YYY)

6.5″ Textured Swirl Plastic Jet (940258YYY)

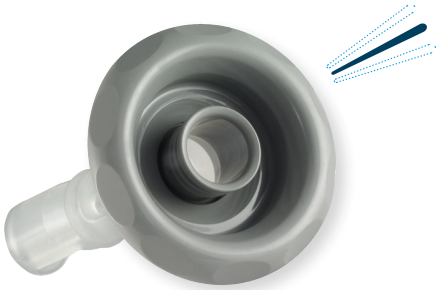

6.5″ Diamond Directional Plastic Jet (940260YYY)

6.5″ Emerald Directional Plastic Jet (940261YYY)

6.5″ Textured Directional Plastic Jet (940262YYY)

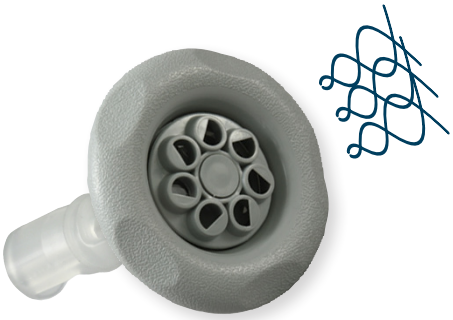

6.5″ Emerald Twin Spin Plastic Jet (940265YYY)

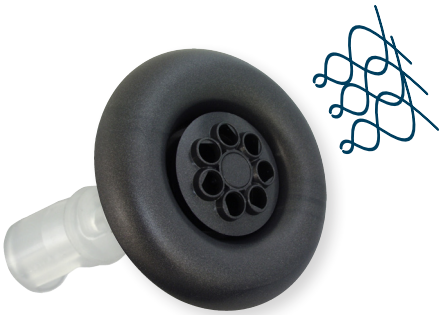

6.5″ Textured Twin Spin Plastic Jet (940266YYY)

6.5″ Emerald Pulsator Plastic Jet (940269YYY)

Available Colors

11 = Black | WW = Grey | MG = Metallic Grey | 35 = Light Grey | 001 = White

Note: Replace YYY with the corresponding color before ordering.

Your Single Source Solution. p 714.384.0384 | f 714.384.0385

We reserve the right to change technical data without further notice.
No copies authorized. All rights reserved. ©2014 Balboa Water Group

BALBOA water group

LidoJetCollection

Spa 6.5" Large Plastic Jets

Fitting Structure

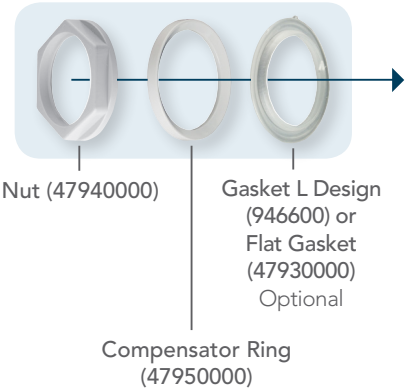

Jet Body (90093800)
⅜" Air Barbed x 1½"Water Socket
With Check Valve (90093400)

Jet Body (90094100)
½" Air Socket x 1½" Water Socket
With Check Valve (90093600)

Jet Body (90093900)
⅜" Air Barbed x 2" Water Socket
With Check Valve (90093500)

Jet Body (90094000)
½" Air Socket x 2" Water Socket
With Check Valve (90093700)

Your Single Source Solution. p 714.384.0384 | f 714.384.0385

We reserve the right to change technical data without further notice.
No copies authorized. All rights reserved. ©2014 Balboa Water Group

6.5″ Lido Jets

6.5″ Large Textured Waterfall Plastic Jet (940274YYY)

6.5″ Large Emerald Waterfall Plastic Jet (940273YYY)

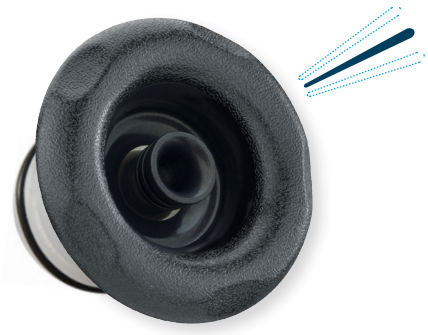

6.5″ Large Emerald Directional Plastic Jet (940277YYY)

6.5″ Large Textured Directional Plastic Jet (940278YYY)

Available Colors

11 = Black | WW = Grey | MG = Metallic Grey | 35 = Light Grey | 001 = White

Note: Replace YYY with the corresponding color before ordering.

Your Single Source Solution. p 714.384.0384 | f 714.384.0385

We reserve the right to change technical data without further notice.
No copies authorized. All rights reserved. ©2014 Balboa Water Group

BALBOA water group

TechnicalInformation

Hole Sizing And Color Codes

Santana Jets Bodies	E″ Diameter	L″ – Length	Hole Size	Torque Foot Pounds
2″	1.9″	2.75″	1.5″ (1½″) L Gasket	5
3″	2.75″ (2¾″)	3.47″	2.125″ (2⅛″) L Gasket	9-11
3.5″ or 4″	3.20″	3.80″	2.56″ (2 9/16″) L Gasket	15-18
3.5″ or 4″	3.20″	3.80″	2.5″ (2½″) Flat Gasket	15-18
5″ or 6.5″	4.75″(4¾″)	5.30″	3.75″ (3¾″) Flat Gasket	28
5″ or 6.5″	4.75″(4¾″)	5.30″	3.90″ L Gasket	28
7″	6.625 (6⅝″)	7.50″	6″	20

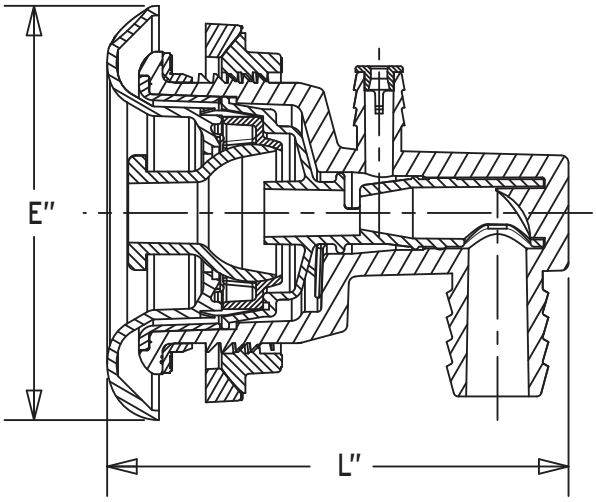

XX COLORS

BK	Black
CG	Grey
MG	Metallic grey
WH	White

YYY COLORS

11	Black
WW	Grey
MG	Metallic grey
35	Light grey
001	White

Your Single Source Solution. p 714.384.0384 | f 714.384.0385

We reserve the right to change technical data without further notice.
No copies authorized. All rights reserved. ©2014 Balboa Water Group

Index

9415YYY 55
9416YYY 55
9510YYY 55
9511YYY 55
9693YYY 55
9781YYY 55
9782YYY 55
9783YYY 55
9784YYY 55
9785YYY 56
9838YYY 49
9839YYY 53
9840YYY 50
9841YYY 53
9844YYY 50
9845YYY 53
9846YYY 50
9847YYY 53
9850YYY 50
9851YYY 53
9852YYY 50
9853YYY 53
28725-XX. 38
94600. 4,6
287701-XX. 16
287705-XX. 26
900118YYY 37
900119YYY 37
900120YYY 37
900121YYY 37
900137YYY 41
900138YYY 41
900139YYY 41
900142YYY 41
900143YYY 41
900145YYY 41
900146YYY 41
900147YYY 41
900205YYY 37
900815YYY 41
900819YYY 33
900820YYY 35
900875YYY 42
900876YYY 42
900927YYY 59
900929YYY 59
900931YYY 59
900932YYY 59
900933YYY 59
901041YYY 45
901042YYY 45
901045YYY 45
901048YYY 31
901049YYY 45
901050YYY 45
901051YYY 45
901053YYY 45
901054YYY 45
901056YYY 31
901057YYY 45
901058YYY 46
901061YYY 46
901062YYY 46
901064YYY 31
901065YYY 46
901066YYY 46
901069YYY 46
901070YYY 46
901072YYY 31
901073YYY 46
901074YYY 46
901077YYY 47
901078YYY 47
901080YYY 31
901089YYY 49
901091YYY 49
901093YYY 49
901094YYY 53
901096YYY 33
901097YYY 49
901099YYY 49
901104YYY 33
901105YYY 56
901108YYY 61
901112YYY 37
902500-XX. 7
902501-XX. 7
903301-XX. 7
903304-XX. 7
903305-XX. 7
903500-XX. 7
903501-XX. 7
903502-XX. 7
903504-XX. 7
903530-XX. 7
903531-XX. 7
903534-XX. 7
905300-XX. 7
905301-XX. 7
905304-XX. 7
905307-XX. 7
905500-XX. 7
905501-XX. 7
905502-XX. 7
905503-XX. 7
905504-XX. 7
940046YYY 49
940048YYY 49
940049YYY 53
940050YYY 49
940051YYY 53
940132YYY 35
940133YYY 33
940136YYY 29
940138YYY 33
940139YYY 35
940140YYY 29
940246YYY 56
940249YYY 56
940250YYY 56
940257YYY 61
940258YYY 61
940260YYY 61
940261YYY 61
940262YYY 61
940265YYY 61
940266YYY 61
940269YYY 61
940273YYY 63
940274YYY 63
940277YYY 63
940278YYY 63
940282YYY 37
940283YYY 37
940815YYY 29
943002-XX. 5
943506. 4,6,8,18,28,40
943509. 4,6,8,18,28,40
944511YYY 56
944530YYY 56
946600. 54,58,60,62
947600. 8,18,28,40
947600-CL. 4,6
947700. 8,18,28,40
948601.4,6,12,14,22,24,32,34,
36,48,52
955600. 48,52
9559004,6,10,11,12,14,20,21,22,
24,30,32,34,36,44
958100. . . .4,6,14,24,36,54,60
9590004,6,10,11,12,14,20,21,22,
24,30,32,34,36,44
960200. 14,24,36,54,60
982300-XX. 5,9
982301-XX. 5,9
982302-XX. 9
982500-XX. 19
982501-XX. 5,19
982502-XX. 19
983300-XX. 5,11
983301-XX. 5,7,11
983302-XX. 11
983303-XX. 11
983304-XX. 5,7,11
983305-XX. 5,7,11
983500-XX. 5,21
983501-XX. 5,21
983502-XX. 21
983503-XX. 21
983504-XX. 21
983505-XX. 21
983530-XX. 5,7,13
983531-XX. 5,7,13
983532-XX. 13
983533-XX. 13
983534-XX. 5,7,13
985300-XX. 5,7,15
985301-XX. 5,7,15
985302-XX. 15
985303-XX. 15
985304-XX. 5,7,15
985305-XX. 15
985306-XX. 15
985307-XX. 7
985500-XX. 5,25
985501-XX. 5,25
985502-XX. 25
985503-XX. 25
985504-XX. 25
985505-XX. 25
985506-XX. 25
985700. 4,6,48,52
985734. 4,6,8,18,28,40
985800. 4,6,48,52
985900. . . . 12,22,32,34,48,52
985900-CL. 4,6
986000. . . . 12,22,32,34,48,52
986200. . . . 12,22,32,34,48,52
986300. 4,6,12,22,32,34,48,52
9009800. 58,62
9035500-XX. 7
9035501-XX. 7
9035502-XX. 7
9035504-XX. 7
9835500-XX. 5,23
9835501-XX. 5,23
9835502-XX. 23
9835503-XX. 23
9835504-XX. 23
47930000. . . . 4,6,54,58,60,62
47940000. . . . 4,6,54,58,60,62
47950000. . . . 4,6,54,58,60,62
47960000. 14,24,36,54,60
47970000. 14,24,36,54,60
47970000-CL. 4,6
90093400. 58,62
90093500. 58,62
90093600. 58,62
90093700. 58,62
90093900. 58,62
90094000. 58,62
90094100. 58,62
90094800. 10,20,30,44
90094800-CL. 4,6
90094900. 10,20,30,44
90095100.4,6,10,11,14,20,21,24,
30,36,44
90095500. 11,21

We reserve the right to change technical data without further notice.
No copies authorized. All rights reserved. ©2014 Balboa Water Group

Balboa Water Group World-Wide

BALBOA WATER GROUP
www.balboawater.com

Corporate Office, Tustin, California
Electronic Manufacturing
1382 Bell Avenue
Tustin, California 92780
P 714.384.0384
F 714.384.0385

Valencia, California
Whirlpool Spa and Bath Manufacturing
28545 Livingston Avenue
Valencia, California 91355
P 714.384.0384
F 714.384.0385

Varde, Denmark
European Sales Division
Roustvej 50
DK-6800 Varde, Denmark
P +45.75.22.46.88
F +45.75.22.52.45

Melbourne, Australia
Australian Sales Division
P 1.800 137 879
F 1.800 0703 233